Journal of Engineering Research and Application
pp: 11-21
Volume 1, July 2022
Issue-1
http://dx.doi.org/10.55953/JERA.1102

Comparison of wind flow effect for varying cross – sectional height of tall building using ANSYS

Ark Rukhaiyar[1,a], Bhagya Jayant[1,a], Kunal Dahiya [1,a] Ritu Raj [2,*]

[1] *Student, Department of Civil Engineering, Delhi Technological University, Delhi, India*
[2] *Assistant Professor, Department of Civil Engineering, Delhi Technological University, Delhi, India*

[a]*arkrukaiyar_2k18ce025@dtu.ac.in, bhagyajayant_2k18ce032@dtu.ac.in, kunaldahiya_2k18ce052@dtu.ac.in*
**Corresponding Author: rituraj@dtu.ac.in*

Abstract: Study of wind is empirical for the designing of tall structures because it considers the instability due to slender behavior of these structures. In this study, three models namely A, B, and C are analyzed on ANSYS using Computational fluid dynamics approach. These three models have a total height of 192 m built of two types of cross – sections as plus and square (below plus). These models differ by the heights of the cross sections only. Plus and square cross – section heights for Model A are 96 m each, for Model B are 48 m and 144 m respectively and for Model C are 144 m and 48 m respectively. CFD simulations are performed for wind of magnitude 10 m/s when incident on these three modes at wind incidence angle 0° and the results are interpreted in terms of pressure contours and streamlines. It is observed that designing for critical faces is a must. Also from streamlines it may be observed that as the cross – sectional height of irregular shape increase, more stability is noticed. It is also observed that the wind velocity increases at the top most points of the models.

***Keywords*.** CFS, ANSYS, tall buildings, varying cross – section, wind

Introduction

Study of wind flow effect is an important aspect for designing of tall buildings. Several studies have been carried out that indicate that irregular cross – sectional shapes provide better stability. Although different parameters of wind flow need to be considered when designing of a building such as interference effect, vortex formation, downdraught effect and many more. Wind is responsible for static, dynamic and aerodynamic effects on tall buildings. While static does not take into account the response of building to wind as in the dynamic, in aerodynamic study

http://dx.doi.org/10.55953/JERA.1102

interaction of wind and body along with its response is observed. This study also aims to carry out an aerodynamic study of wind flow effect on three varying cross – section tall buildings and thereafter compare them. This study therefore envisions to strengthen the research in the domain of wind effect on tall buildings. As will be discussed in the upcoming sections, the models are prepared and results recorded such that it can work as a pre – requisite guide for similar designing.

Numerical Model Development

In this study, three models namely A, B, and C as shown in Fig. 2 are designed on AutoCAD: 3D Modelling and analyzed using ANSYS: CFX post processing mode. The three models have two cross – sectional shapes as square and plus of dimensions 40 m side each as shown in Fig. 1. For Model A, the height of square and plus cross – sections are 90 m each. Similarly, for Model B square and plus dimensions are 48 m and 144 m respectively and for Model C they are 144 m and 48 m respectively.

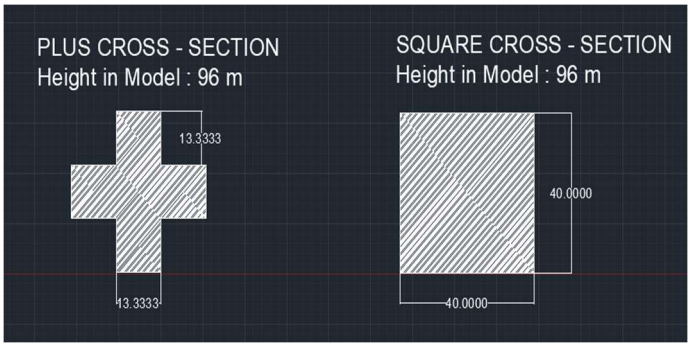

Fig. 1. Types of cross – section in designed models

Individual models are imported on ANSYS and 5 steps are performed on it for complete analysis for wind effect when wind of magnitude 10 m/s is incident on it at the wind incidence angle of 0°. These steps are geometry, meshing, set – up, solution and result. Terrain category 2 is considered in geometry step. Also, domain is created around the model of height h (let) which is at a distance of 5h from the top of the model, windward face, and lateral faces and is at a distance of 15h from the leeward face. In the meshing step, tetrahedral meshing is done for element size of 0.2 m along with inflation at the boundary of the model. Next, in the set – up and solution steps, power law is utilized and pressure is measured in terms of pressure coefficients wherein the following is considered.

Journal of Engineering Research and Application
pp: 11-21
Volume 1, July 2022
Issue-1
http://dx.doi.org/10.55953/JERA.1102

- α = 0.147
- Zref = 1 m
- Uref = 10 m/s

Power law is used for calculation of pressure.

$$P = U_{ref}\left(\frac{Z^{\alpha}}{Z_{ref}^{\alpha}}\right) \quad (1)$$

The program is run for about an hour before the results are evaluated. The following formula is used for calculating the coefficient of pressure value.

$$C_p = \frac{p - p_{\infty}}{\frac{1}{2}pU_H^2} \quad (2)$$

V_{ref} is assumed to be 10 m/s

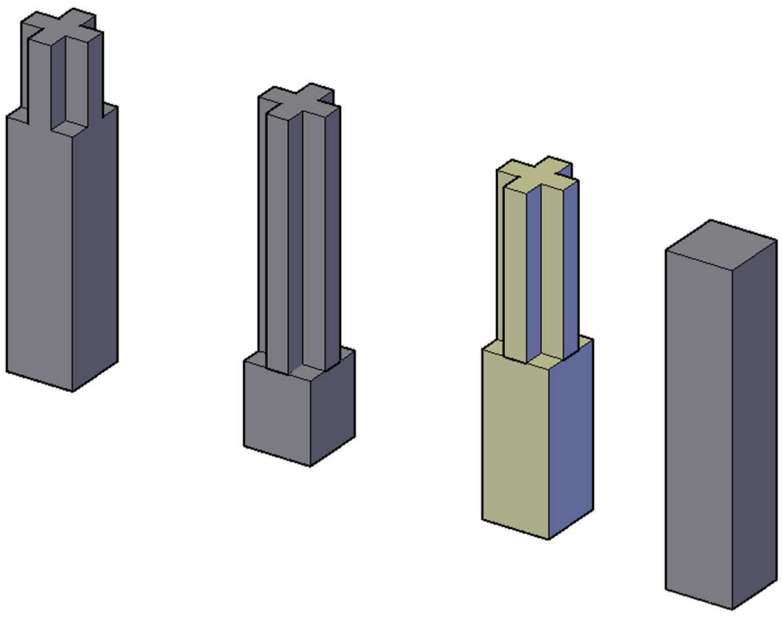

Fig. 2. Mode B, Model C, Model A, and Model X respectively

Journal of Engineering Research and Application
pp: 11-21
Volume 1, July 2022
Issue-1
http://dx.doi.org/10.55953/JERA.1102

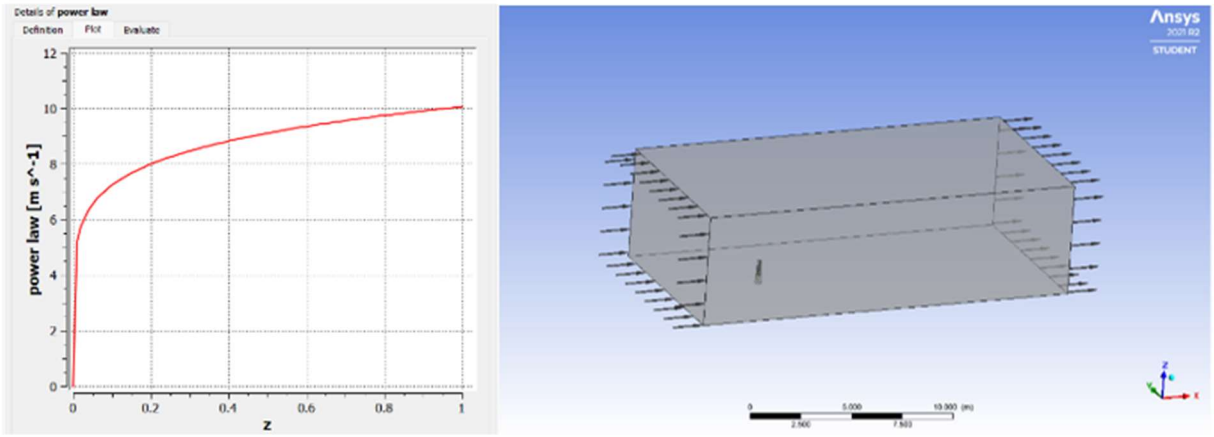

Fig. 3. Representation of Setup in ANSYS: CFX

Thus, value of pressure density comes out to be

$p_a = 1.225\ kg/m^3$

Validation

Models are verified using a reference isolated model named as Model X as shown in Fig. 2. The model is made such that the cross – section is regular in shape. The following table tallies the C_p values got with standard values in accordance to IS 875 (Part 3).

Table:1 Validation over Model X

Coefficient of Pressure, C_p	**Faces of Model X**			
	A	**B**	**C**	**D**
According to IS: 875 (Part III) – 2015	+0.8	-0.25	-0.8	-0.8
Model X	+0.66	-0.28	-0.65	-0.65

Journal of Engineering Research and Application
pp: 11-21
Volume 1, July 2022
Issue-1
http://dx.doi.org/10.55953/JERA.1102

It is observed that the C_p values obtained after CFD post processing vary under permissible range by 17.528%, 11.162%, 18.558% and 18.55875% for faces A, B, C, and D respectively.

Results and Discussion

Pressure Contours

Case 1 – Incident wind angle is 0°

Case 1.1 – Face A

Model A Model B Model C

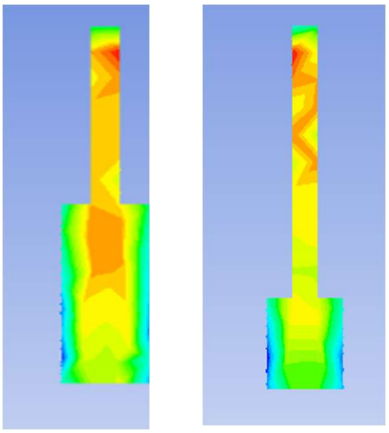

Case 1.2 – Face B

Model A Model B Model C

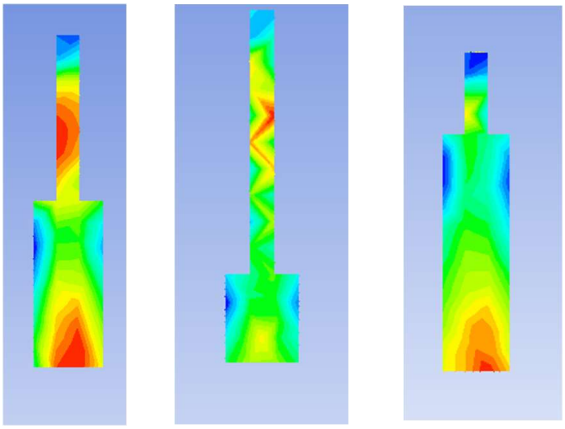

Case 1.3 – Face C

Model A Model B Model C

Case 1.4 – Face D

Model A Model B Model C

Journal of Engineering Research and Application
pp: 11-21
Volume 1, July 2022
Issue-1
http://dx.doi.org/10.55953/JERA.1102

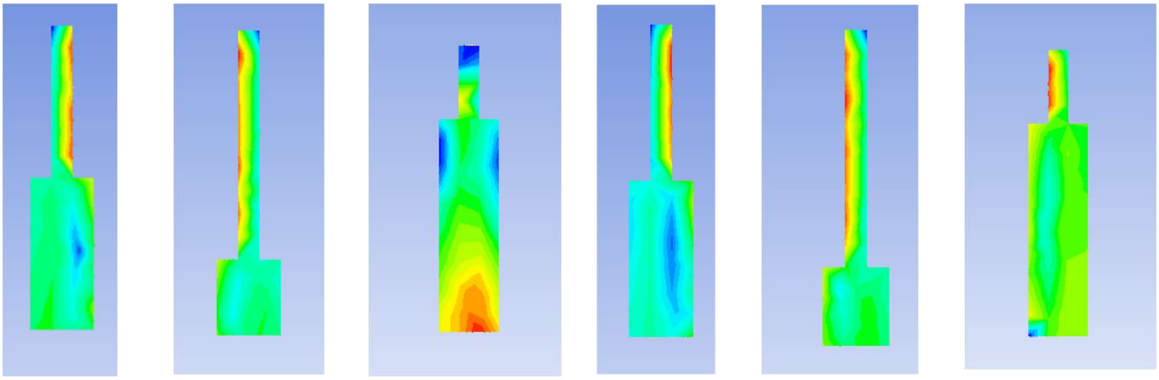

From the above pressure contours, the following conclusions may be drawn when wind incidence angle is 0°.

- Value of C_p for Model A lies in the range ϵ [-0.86084, 0.666623]. Maximum negative and positive coefficients of pressure of -0.86084 acted on the face B and 0.666623 acted on the face D respectively. Therefore, faces B & D are the critical faces in this case.
- Value of C_p for Model B lies in the range ϵ [-0.54769, 0.555166]. Maximum positive and negative coefficients of pressure of 0.555166 for face A and -0.54769 for face B.
- Value of C_p for Model C lies in range ϵ [-2.13996, -0.50348] with maximum negative coefficient of pressure of -2.13996 for face A thereby making it the critical face.

Streamlines

Streamlines indicate the flow pattern of fluid around a solid or bluff body. Following sub – sections discuss the results got after analysis of wind on the three models namely A, B, and C.

Vertical and Horizontal streamlines

The vertical streamlines for Model A, B, and C were obtained using ANSTS: CFX post processing mode when wind incidence angle of 0° is set.

Horizontal streamlines (at changed cross – section)

Journal of Engineering Research and Application
pp: 11-21
Volume 1, July 2022
Issue-1
http://dx.doi.org/10.55953/JERA.1102

Model A Model B Model C

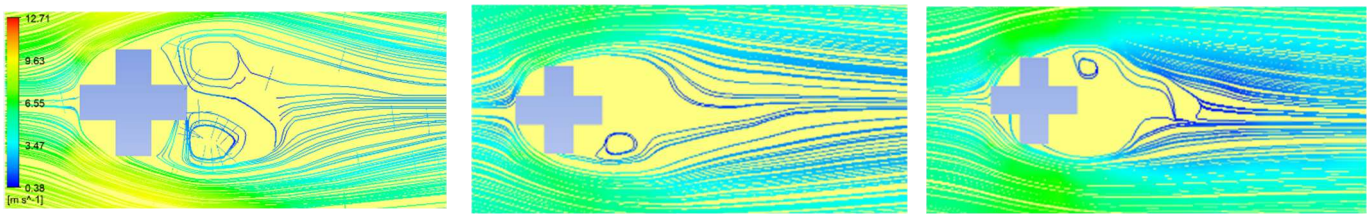

The following conclusions may be drawn from the horizontal streamlines obtained when wind incidence angle is 0°.

- For Model A, two vortices or recirculation zones are formed symmetrical on both its sides near faces C, B, and D..
- For Model B, one vertex formation occurs at some distance away from the faces at lower leeward side where cross – section changes.
- For Model C, one vertex formation occurs at some distance away from the faces at upper leeward side where cross – section changes.

Vertical streamlines

Model A Model B Model C

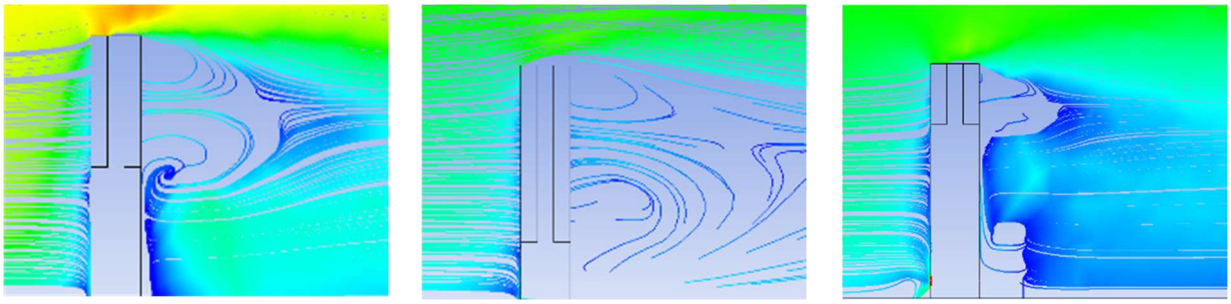

The following conclusions may be drawn from the vertical streamlines obtained when wind incidence angle is 0°.

- For Model A, it is observed that wind direction reverses in the wake region, creating a separation zone. Increased velocity is observed at the top most point of model from where the streamlines change direction. It is observed that the streamlines are symmetrical and therefore will have minimum wind effect on structure.

http://dx.doi.org/10.55953/JERA.1102

- For Model B, although streamlines are broken there is a no separation zone observed at the wake region of the model.
- For Model C, wind is changing directions in the wake region creating vortex and congested streamlines.
- For wind incidence angle 0°, Model B is better in comparison to Model A and Model C because it has comparatively less congested stream lines and vortex formation. In Model A and Model C high kinetic turbulent flow lines near the square section of the building or model is observed.
- Wind velocity increases at the top most points of all models.

Conclusion

From this study the following conclusions maybe drawn.

- As discussed in the validation section, Model X which is a reference model for the study is in compliance with international standards. Therefore, consequently the three models are also validated.
- It was observed that Model A had the best design as it showed minimal turbulence when incident wind angle is kept as 0°.
- From the pressure contours obtained it maybe concluded that the designing must be done keeping in mind the critical faces as clearly discussed in the subsection.
- For horizontal streamlines as height of plus cross – section increases, streamlines become more symmetrical.
- As the height of plus cross – section is increased, less wind effect is observed as per vertical streamlines.
- CFD approach is faster approach in comparison to other popular methods like wind tunnel testing.

http://dx.doi.org/10.55953/JERA.1102

Acknowledgement

The authors would like to acknowledge This is to acknowledge that the study would have been incomplete without an immense support and guidance throughout from Research scholar, Rahul Meena, Delhi Technological University, Delhi. The authors would also like to express the gratitude for constant

References

1. Ahirwar, Ritu & Meena, Rahul. (2022). Response of Tall Building with Different Side Ratiounder the Effect of Wind Load.
2. Pal, S., Raj, R., & Anbukumar, S. (2021). Bilateral interference of wind loads induced on duplicate building models of various shapes. *Latin American Journal of Solids and Structures*, *18*(5). https://doi.org/10.1590/1679-78256595
3. A. K. Bairagi and S. K. Dalui. (2021). Estimation of wind load on stepped tall building using CFD simulation. Iranian Journal of Science and Technology, Transactions of Civil Engineering, vol. 45, no. 2, pp. 707–727.
4. Pal, S., Raj, R., & Anbukumar, S. (2021). Bilateral interference of wind loads induced on duplicate building models of various shapes. Latin American Journal of Solids and Structures, 18(5). https://doi.org/10.1590/1679-78256595
5. Assainar, N., & Dalui, S. K. (2021). Aerodynamic analysis of pentagon-shaped tall buildings. *Asian Journal of Civil Engineering*, *22*(1), 33–48. https://doi.org/10.1007/s42107-020-00296-2
6. Pal, S., Raj, R., & Anbukumar, S. (2021). Comparative study of wind induced mutual interference effects on square and fish-plan shape tall buildings. *Sadhana - Academy Proceedings in Engineering Sciences*, *46*(2). https://doi.org/10.1007/s12046-021-01592-6
7. Gaur, N., Raj, R., & Goyal, P. K. (2021). Interference effect on corner-configured structures with variable geometry and blockage configurations under wind loads using CFD. *Asian Journal of Civil Engineering*, *22*(8), 1607–1623. https://doi.org/10.1007/s42107-021-00400-0

http://dx.doi.org/10.55953/JERA.1102

8. Abu-Zidan, Y., Mendis, P., & Gunawardena, T. (2021). Optimising the computational domain size in CFD simulations of tall buildings. Heliyon, 7(4). https://doi.org/10.1016/j.heliyon.2021.e06723
9. Shahab, K., Irtaza, H., & Agarwal, A. (2021). Comparative Study of Aerodynamic Coefficients of Prismatic and Twisted Tall Buildings with various Cross Sections using CFD. *Journal of The Institution of Engineers (India): Series C, 102(3), 635–650.* https://doi.org/10.1007/s40032-021-00694-8
10. Ahirwar, Ritu & Srinivasan, Anbukumar & Meena, Rahul. (2021). Numerical Investigation of Wind Load on Side Ratio of High-Rise Buildings. 10.1007/978-981-16-6557-8_76.

Received: 10 February 2022

Revised: 20 April 2022

Accepted: 26 April 2022

Journal of Engineering Research and Application